erreesse

Specials

DEPV - DUAL EXPANDING PLUG VALVE

HIGH PERFORMANCE VALVES
EXTREME APPLICATIONS



APPLICATIONS

Metering Skids

Tank Terminals

Airports/Fuel Hydrant Systems

Pipelines & Filling Lines

Manifolds



MAKE THE RIGHT CHOICE

Corrosion is a gradual loss of material by chemical or physical reaction with the process fluid; depending on concentration, temperature and pressure drop the exposed to fluid surfaces can be seriously damaged impairing the performance of the valve, unless the correct valve type and materials are selected. The right, conscious and diligent selection of both non-metallic and metallic materials along with their proper handling are very important issues from a safety viewpoint.

DEPV
DUAL EXPANDING PLUG VALVE

ERREESSE, established in 2004, is a manufacturing company based in Northern Italy, in the town of Grignasco in the green Valsesia (Sesia Valley), along the enchanting Sesia River, 45 minutes from Milan Malpensa Airport. Passion, knowledge, smart attitude and hard work allow us to propose and supply our Customers with the best solution for their needs. The development of new technologies, the know-how and the expertise of our team resulted in an ongoing success which makes us a reliable supplier.

Our target is to supply a high performance Italian product and a customized service, to make the difference. The ever-changing needs of our Customers drive the ERREESSE Engineering & Production Team to offer continuous innovations and an improved valve range year after year. Each step of valve engineering and manufacturing can be validated using advanced software (AutoCAD, Solid Works 3D) through Finite Element Analysis of loads, tensions and deformations and final Stress tests, according to the applicable International Standards.

With a clear vision into the future, we will deliver greater value to both our clients and employees with continued focus on technology innovation, cooperation, transparency and trust. The key to our success lies in our business philosophy characterized by positive thinking and creative wisdom.

DO WHAT IS RIGHT, NOT WHAT IS EASY.

The ERREESSE DBB Plug Valve has an integrated DBB function with a compact design and few moving parts, resulting in less maintenance, a longer lifetime and much lower operational costs for the end user. ERREESSE DBB Plug Valves operate without any friction or contact between seals and seating area while maintaining 100% tight shut-off, sealing in both directions. Top and bottom access makes inline inspection and maintenance possible. Due to the backseat design it is possible to renew the stem packing while the valve is pressurized. The ERREESSE DBB Plug Valve is non-lubricated.



Size range:	2” up to 42”
Pressure:	150# up to 1500#
Materials:	All materials available on request
Connections:	RF, RTJ, Hub end, Buttweld
Temperatures:	-196°C up to 200°C (-320° up to 392°F)
Bore:	Reduced or Full (Piggable)

Bleed Systems:	Automatic Body Bleed
	Manual Bleed Valve
	Thermal Relief Upstream
	Manual Bleed & Thermal Relief



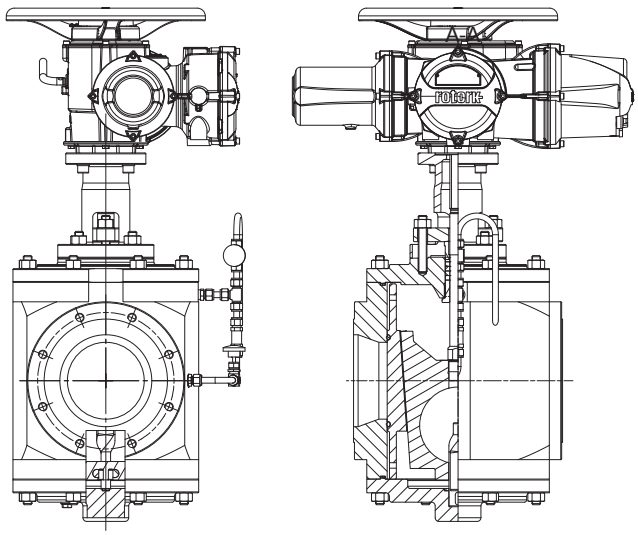

erreesse
Specials

Via delle Betulle 8A/8B/8C, 28075 Grignasco (NO) - ITALY
Main phone +39 0163 415901 - Fax +39 0163 415941
ITALY - P.IVA/VAT no. 02168380026

e-mail: **sales@erreesse-valves.com**
website: **www.erreesse-valves.com**

