Floating Ball Valve Top Entry bolted body SW - High Temperature

Metal seated with metal sealing and stem extension for steam service and high temperature applications. The special design is suitable for service up to 816°C and over. Special valve constructions to allow easy on-site maintenance and disassembly with quick access to ball and seats for inspection and repair.

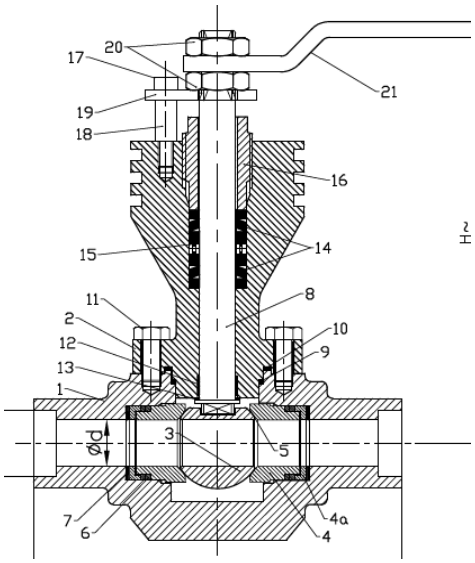

GENERAL APPLICATION

Heating to boiling points, catalytic and hydro-treatments are some of the refining processes necessary to separate crude oil into storable fractions like marketable oils and condensate; most of these processes take part at high temperatures. ERREESSE production range offers valves engineered to withstand and exceed high temperature applications with specific constructions and duly selected materials.

APPROVALS

Safety Integrity Level	SIL 3
Fire Safe	Valves are intrinsically fire safe as no soft parts are incorporated in valve design. In case required it can be supplied according to API607, API 6FA, BS 6755, ISO 10497-5
Area Classification	ATEX 2014/34/EU (II 2GD EEx d)
PED	2014/68/UE module H with CE marking
Fugitive Emission	ISO 15848/1
Construction	API 6D
Other	GOST, EAC, CUTR

MATERIALS OF CONSTRUCTIONS

Low Alloy Steel and Stainless steel
Other materials can be used upon request

STANDARD FEATURES

Construction	One piece bolted bonnet
Port	Reduced bore, full bore or fully piggable
Stem retention	Anti blow-out stem
Leakage rate	ISO 5208 rate A, B, C or D
Antistatic device	Included, the ball valve design includes an electric conductive connection between the internal parts of the ball valve and the body, providing the anti-static function.
Pressure relief	Automatic cavity relief to prevent overpressure in body cavity (self-relieving seats)
Sealing	Bi-directional Metal seated with Chrome Carbide Coating and Stellite coating depending on the application and temperature range Metal seat sealing with differential hardness between ball and seat to prevent galling of the substrate. Metal sealing by means of graphite packings on all valve seal areas.
Drain	None
Vent	None
Grease injectors	None
Lifting points	None
Support feet	None
Stem extension	High Temperature stem extension as standard to allow for thermal dissipation of excess temperature and allow for the seals to work properly at a lower temperature than that of the process fluid in bore.
Valve operation	Lever, Gear box or Actuator with position indicator and locking device
Material certification and testing	Pressure containing & controlling parts to EN 10204 3.1 Materials in Sour Service according to NACE MR0175, MR0103, ISO 15156 Non-destructive testing (NDT) to API 6D, ASME B16.34
Valve testing	Hydrostatic & pneumatic testing to API 6D, ASME B16.34, ISO 5208. High temperature testing available on request

TECHNICAL DATA

Design	API 6D, API 6DSS, SME B16.34, ISO 14313, ISO 10423, ISO 17292, other upon request
Design pressure	ASME B16.34, EN 1092-1, ISO 17292
Body wall thickness	ASME B16.34, ASME VIII Div. I-II-III, ISO 17292
Face to Face	API 6D, ASME B16.10 Long pattern
Temperature range	-29° to > 816°C (-20° to > 1500°F)
Pressures range	PN20 (ANSI 150) to PN420 (ANSI 2500)
Size range	DN15 (1/2") to DN25 (1")
End connections	ASME B16.5 Flanged RF,FF,RTJ ASME B16.25 Butt-Weld BW ASME B16.34 - ASME B161.0 Socket-Weld SW or PE (pups upon request) Other upon request

APPLICATIONS

UTILITY

CORROSIVE & DIRTY

HIGH TEMPERATURE

HIGH PRESSURE

All data stated in this sheet are subject to changes and amendments which will be not notified and are for general information only.
Erreesse disclaims any liability for damages occurred due to his wrong use and interpretation.

Erreesse s.r.l. Via delle Betulle 8A/8B/8C, 28075 Grignasco (NO) Italy - 0039 0163 415901 - 0039 0163 415941 - sales@erreesse-valves.com