erreesse

Specials

VP - PIG SERVICE BALL VALVE

COMPACT DESIGN
EASY AND SAFE OPERATION



VP - TRUNNION S. ENTRY PIG SERVICE BALL VALVE

APPLICATIONS

The continuous request from End Users to improve weights and emission of the plants, inspired and motivated ERREESSE on the development of a new product: PIG SERVICE VALVES allow the easy cleaning of pipeline by using a pig inserted in the valve body by means of a compact pig port.
The special experienced design, grants the pig to be launched and received safely.

PIVOTAL FEATURES:

- Proven shut-off double block and bleed design as a standard ball valve
- Easy and safe operation with no requirement of special tool.

DESIGN:

- ✓ Compatible design with a huge range of commercial pigs,
- ✓ Flexible design to grant high performance on severe service,
- ✓ Very compact design in order to reduce the space required for pigging facilities.



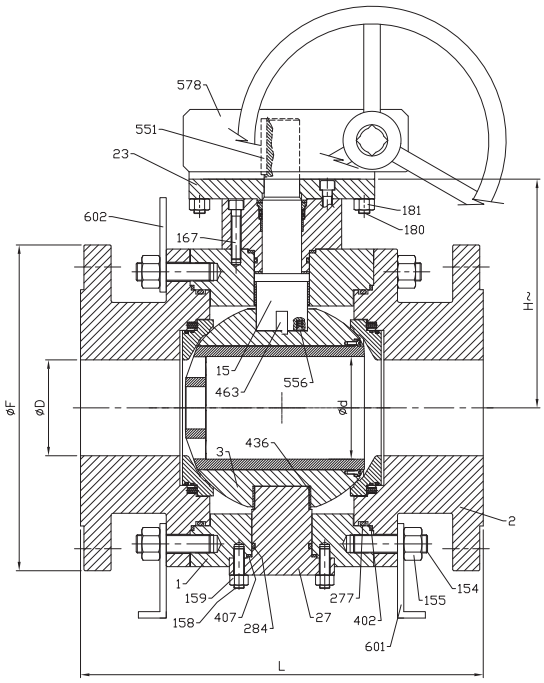

ERREESSE, established in 2004, is a manufacturing company based in Northern Italy, in the town of Grignasco in the green Valsesia (Sesia Valley), along the enchanting Sesia River, 45 minutes from Milan Malpensa Airport. Passion, knowledge, smart attitude and hard work allow us to propose and supply our Customers with the best solution for their needs. The development of new technologies, the know-how and the expertise of our team resulted in an ongoing success which makes us a reliable supplier.
Our target is to supply a high performance Italian product and a customized service, to make the difference. The ever-changing needs of our Customers drive the ERREESSE Engineering & Production Team to offer continuous innovations and an improved valve range year after year. Each step of valve engineering and manufacturing can be validated using advanced software (AutoCAD, Solid Works 3D) through Finite Element Analysis of loads, tensions and deformations and final Stress tests, according to the applicable International Standards.
With a clear vision into the future, we will deliver greater value to both our clients and employees with continued focus on technology innovation, cooperation, transparency and trust. The key to our success lies in our business philosophy characterized by positive thinking and creative wisdom.

MAKE THE RIGHT CHOICE

Corrosion and erosion are typical phenomena that always affect pipelines; depending on media type, concentration, temperature and pressure drop, the exposed to fluid surfaces can generate a big amount of debris that must be removed from process, by installing correct pig valve type and selecting suitable materials for construction. The proper design criteria, together with the right, conscious and diligent selection of both non-metallic and metallic materials along with their proper handling are very important issues from a safety viewpoint.

"Where FOCUS goes, ENERGY flows"

cit. Tony Robbins

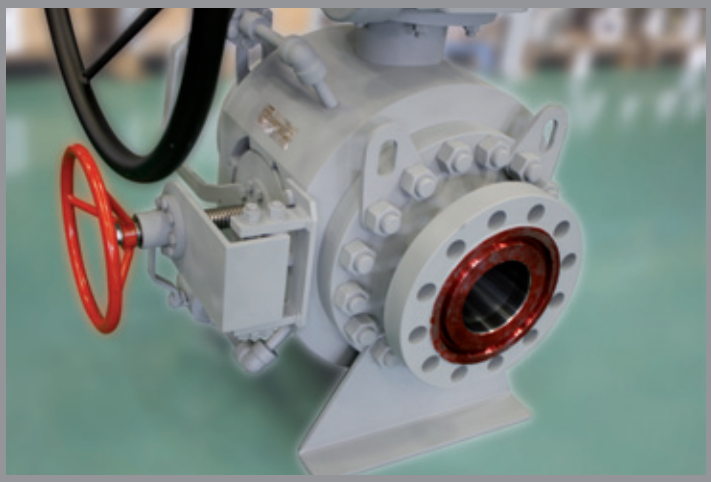

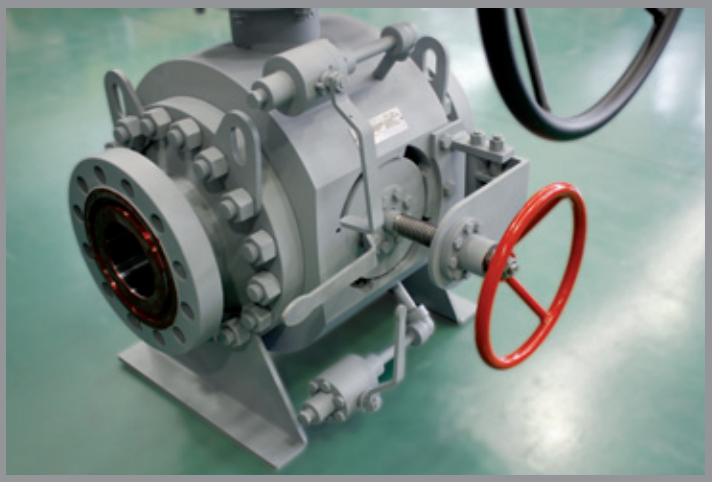

ERREESSE pig service valves are very compact split bolted body ball valves, which match the consistent historical high performance of trunnion design together with a special feature of the direct access to the ball bore, by means of the pig port directly connected to the valve body. The compactness and the consistency of the design of the pig port avoids any unexpected operation, thanks to a defined step-by-step combination of operations arranged both to enter the pig inside the valve and to remove it from the bore. This sequence of activities is led by double safety mechanical blocks that inhibit the opening of the pig port when the valve is under pressure.

Furthermore, when the pig port is fully closed, the special shape of the pig port cover can be considered totally compliant with an anti blow-out design granted by an integral shoulder directly machined in the valve body.

Erreesse always recommends the use of standard pigs. Thanks to the high versatility of the design, the pig service valves can be supplied with fully customized trim, based on the correct ratio between the piggable bore and the pig length. This mandatory data, is usually on charge of the customer / commitment who has the knowledge of the set of pigs used on the plant where the valves will be installed.

Erreesse, considering the wide range of the pigs already present on the market together with the design experience on this kind of valves, suggests to maintain the above-mentioned ratio from 1,2 up to 1,8.

In order to fully satisfy project requirements, Erreesse team and customers keep on sharing the paramount information at every stage. Collaboration is mandatory to reach the goal.

ADVANTAGES

Through the continuous design improvement, the special feature of removable pig trap from the valve bore allows to convert the pig valve in a standard on/off ball valve. This important arrangement enables the possibility to perform both total or partial cleaning of the pipeline, installing a suitable number of pig valves along the piping and selecting each time which valve can be used as a pig launcher or receiver and which valve can be left as a standard valve with no pig trap inside the ball.

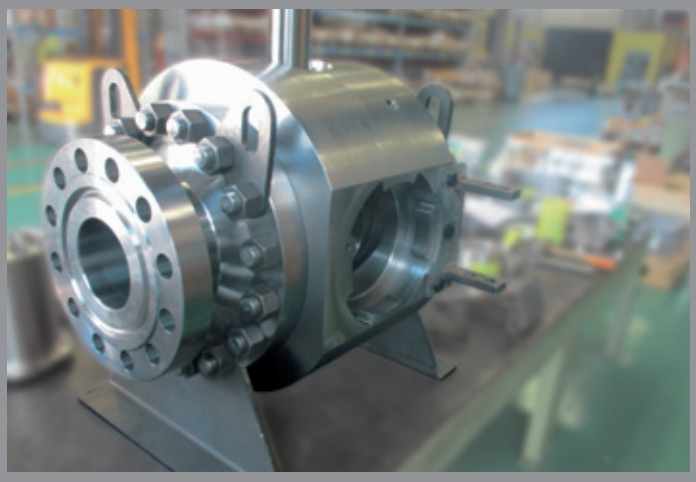



VP – Trunnion ball valve for pigging service

Standard Features

Construction	2-pcs or 3-pcs bolted body
Port	Full with fixed or removable pig trap
Stem retention	Anti-blow-out stem
Sealing	Double seated with DBB sealing. Metal seated with Tungsten or Chrome Carbide or Stellite coating; Soft seated with thermoplastic polymers (Nylon, Devlon, PEEK, PCTFE), special polymers upon request
Leakage rate	ISO 5208 rate A soft seated, rate B, C, D metal seated
Operating Description	When the valve is closed, after discharging the pressure trapped in the body cavity, the pig port can be opened in order to put the pig inside the ball bore, ready for launching. After the cleaning operations of the pipeline, the pig can be easily removed from the ball accessing through the same port.
Lifting points	Included for sizes ≥ DN150 (6”) or on valves of 250 kg min
Support feet	Included for sizes ≥ DN150 (6”) or on valves of 250 kg min
Stem extension	Available for applications in low/cryogenic temperature applications or for high temperature application
Valve operation locking device (optional)	Lever, Handwheel or Gear box with position indicator and locking device
Material testing	Pressure containing & controlling parts to EN 10204 3.1 Materials in Sour Service according to NACE MR0175, MR0103, ISO 15156 Non-destructive testing (NDT) to API 6D, ASME B16.34
Valve testing	Hydrostatic & pneumatic testing to API 598 or API 6D, ASME B16.34, ISO 5208 (other upon request)

Technical Data

Design	API 6D, API 6DSS, API 6A, ASME B16.34, ISO 10423, ISO 17292
Design pressure	ASME B16.34, API 600
Wall thickness	Acc.to ASME B16.34, ASME VIII Div. I, ASME VIII Div. 2, ISO 17292
Face to Face	API 6D, ASME B16.10 Long pattern or manufacturer STD
Temperature range	-196° to 550°C (-320° to 1022°F)
Pressures range	PN20 (ANSI 150) to PN420 (ANSI 2500)
Size range	DN50 (2”) to DN600 (36”)
End connections	ASME B16.5 ≤ DN600 (24”) Flanged RF, FF, RTJ MSS-SP-44 = DN550 (22”) Flanged RF, FF, RTJ ASME B16.25 Butt-Weld BW Clamp (HUB)

Approvals

Safety Integrity Level	Upon request
Fire Safe	API 607, API 6FA, BS 6755, ISO 10497-5
Area Classification	ATEX 94/9/EC
Pressure Equipment Directive	PED 2014/68/EU
Fugitive Emission	ISO 15848/1, ISO 15848/2



EASY CLEANING SERVICE

CORROSIVE & DIRTY

CUSTOMIZED TRIM

HIGH PRESSURE



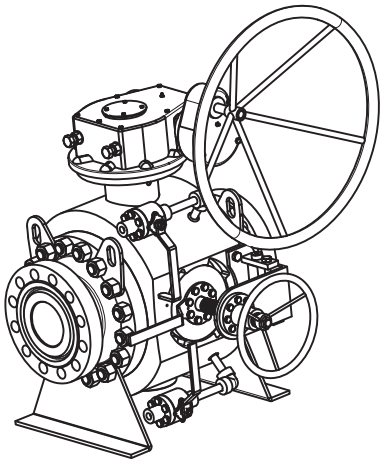

STEP 0
PUT THE VALVE IN CLOSED POSITION BY ROTATING THE GEARBOX HANDWHEEL

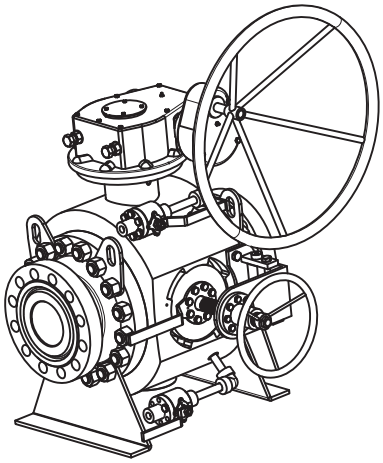

STEP 1
OPEN VENT AND DRAIN VALVE TO EXAHUST PRESSURE FROM PIG PORT

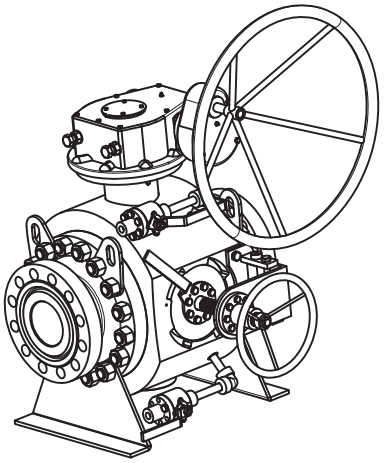

STEP 2
DISENGAGE THE PIG PORT BY ROTATING PIG PORT LEVER

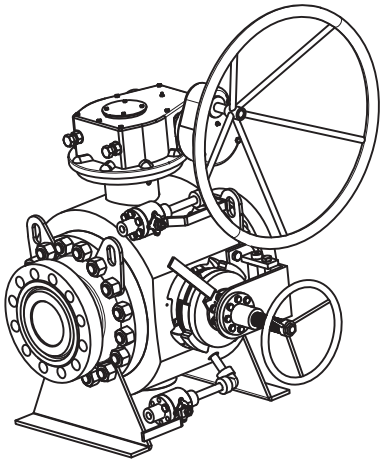

STEP 4
TURN THE PIG PORT HANDWHEEL TO EXTRACT THE PIG CAP FROM THE BODY

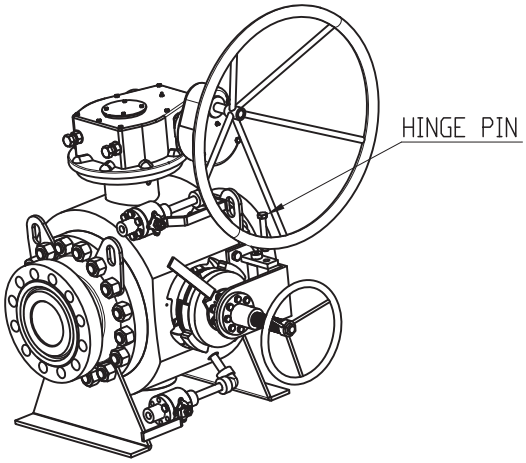

STEP 5
REMOVE THE HINGE PIN

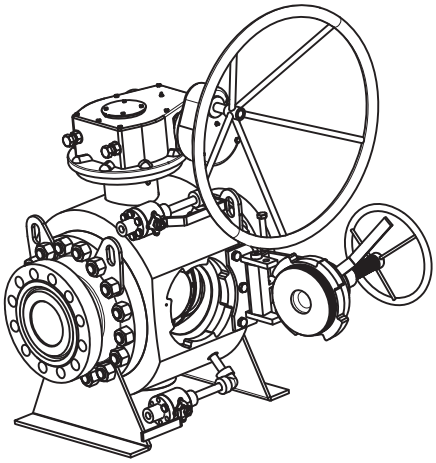

STEP 6
TURN THE HINGE TO HAVE FREE ACCESS TO THE PIG TRAP INTO THE BALL BORE

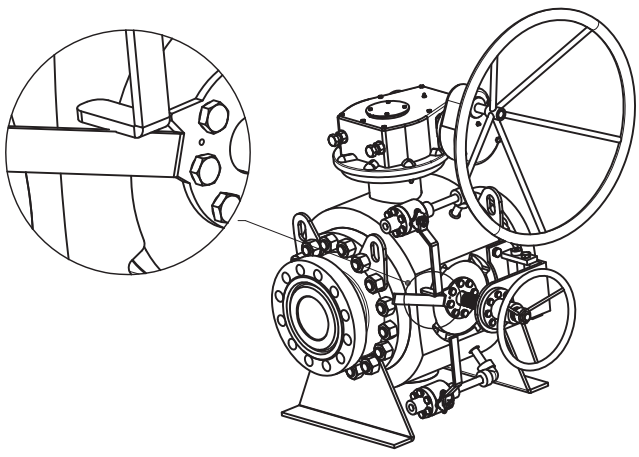

SAFETY FEATURES:

THE SPECIAL PROFILE OF THE PIG PORT, TOGETHER WITH THE POSITION OF THE VENT BALL VALVE IS MAIN SAFETY DEVICE OF THE OPENING SYSTEM.
IN FACT, WHEN THE VENT VALVE IS CLOSED, ITS LEVER CONSTITUTES AN OBSTRUCTION THAT AVOIDS THE OPENING OF THE PIG PORT. THIS MEANS THAT IS IMPOSSIBLE TO OPEN THE PIG PORT BEFORE RELIEVING THE INSIDE PRESSURE (STEP 3 CANNOT BE PERFORMED).

MOREOVER, THE HINGE DESIGN WITH SAFETY PIN ALLOWS A SMOOTH EXTRACTION OF THE PIG CAP THAT AVOIDS UNEXPECTED DAMEGES OF THE SEALING PARTS (STEP 4 SHALL NOT BE PERFORMED IF THE PIN ISN'T CORRECTLY FITTED).



erreesse

S p e c i a l s

Via delle Betulle 8A/8B/8C, 28075 Grignasco (NO) - ITALY
Main phone +39 0163 415901 - Fax +39 0163 415941
ITALY - P.IVA/VAT no. 02168380026

e-mail: **sales@erreesse-valves.com**
website: **www.erreesse-valves.com**