erreesse
Specials

RSBV - RISING STEM BALL VALVES

HIGH PERFORMANCE VALVES
EXTREME APPLICATIONS



APPLICATIONS

There are many difficult applications which are challenging to the valve's ability to provide acceptable duration and performance, VRS TOP ENTRY RISING STEM are designed to appropriately handle severe service applications, whether such applications are corrosive with acid solutions or have higher cycle frequencies and higher pressure and temperature.

Frequent cycling service
Molecular sieve dehydration
Cryogenic and LNG
Dryer switching
Suction and discharge isolation
Hydrogen service
Heat transfer and hot oil installations
Flowlines
Emergency shutdown
Critical and lethal service
Sand slurry service
Geothermal applications
Custom made fit for purpose



MAKE THE RIGHT CHOICE

Corrosion is a gradual loss of material by chemical or physical reaction with the process fluid; depending on concentration, temperature and pressure drop the exposed to fluid surfaces can be seriously damaged impairing the performance of the valve, unless the correct valve type and materials are selected. The right, conscious and diligent selection of both non-metallic and metallic materials along with their proper handling are very important issues from a safety viewpoint.

VRS TOP ENTRY RISING STEM BALL VALVE

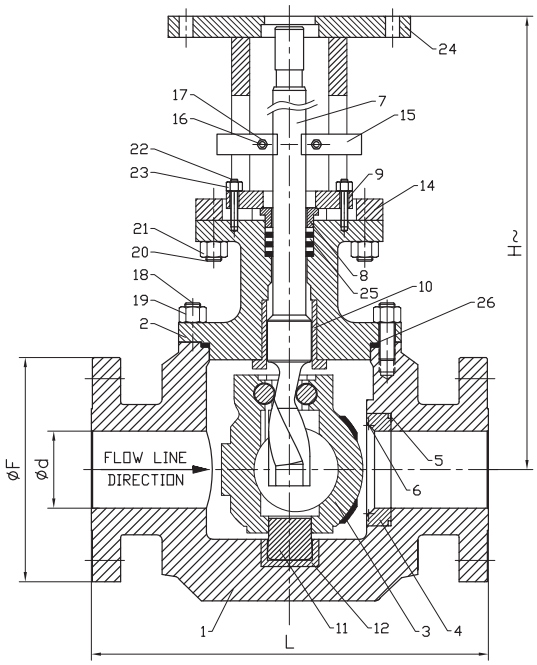

ERREESSE, established in 2004, is a manufacturing company based in Northern Italy, in the town of Grignasco in the green Valsesia (Sesia Valley), along the enchanting Sesia River, 45 minutes from Milan Malpensa Airport. Passion, knowledge, smart attitude and hard work allow us to propose and supply our Customers with the best solution for their needs. The development of new technologies, the know-how and the expertise of our team resulted in an ongoing success which makes us a reliable supplier.
Our target is to supply a high performance Italian product and a customized service, to make the difference. The ever-changing needs of our Customers drive the ERREESSE Engineering & Production Team to offer continuous innovations and an improved valve range year after year.
Each step of valve engineering and manufacturing can be validated using advanced software (AutoCAD, Solid Works 3D) through Finite Element Analysis of loads, tensions and deformations and final Stress tests, according to the applicable International Standards.
With a clear vision into the future, we will deliver greater value to both our clients and employees with continued focus on technology innovation, cooperation, transparency and trust. The key to our success lies in our business philosophy characterized by positive thinking and creative wisdom.

DO WHAT IS RIGHT, NOT WHAT IS EASY.





ERREESSE Rising stem ball valves are very versatile top entry ball valves supporting extreme temperatures and pressures, designed to handle severe service applications, whether they are corrosive with acid solutions or have higher cycle frequencies, they are an excellent choice for shutoff applications and processes in the Oil & Gas, LNG, Petrochemical, Power Generation and Geothermal Industries. The VRS model valve solution ensures a perfect performance at primary and secondary sealing due to an accurate design concept considering soft and metal seated configurations. VRS model valve is designed to provide a frictionless sealing structure where the ball is detached from the seat by a linear movement before the rotation takes place. This unique and long-life design significantly reduces valve torques and minimizes maintenance frequency allowing maintenance and visual inspection inside the valve without removing it from the pipeline.

Seat tightness up to ANSI FCI-70-2 Class VI for metal seated valves is achieved with lapping technique over sealing surface of the ball and seat ring to endure no seating leakage.

In the fully open position, valve provides a clear though conduit; at this position the stem is raised to its maximum limit and there is no contact between ball and seat. To close the valve, the handwheel must be turned in clockwise direction. The interaction between precision helical guideway and roll pin makes the stem and ball rotate up to 90°c. there is still no contact between the ball and seat during this movement avoiding any damage to sealing surface. Once the ball has turned 90° the stem stops its rotation and continue with its linear movement, thus make the ball and valve seat closely contacted, this specific movement of the ball achieves a positive sealing when the valve is fully closed.

ADVANTAGES

The ball movement off the seats allows a cleaning action of the ball surface with no friction during opening and closing with a considerable reduced torque.

Easy in-line inspection and maintenance, self-cleaning. Single seat design, no valve body cavity.

Unidirectional or bidirectional on request.

Outside screw and yoke, backseat allows adjustable stem packing while valve is in service. The tilting operation movement before rotating causes high velocity flows around the sealing surface that flush away every foreign material from the seat.



VRS - Trunnion Ball valve Top Entry - Rising Stem

Standard Features

Construction	One piece bolted bonnet
Port	Reduced bore, full bore or fully piggable
Stem retention	Anti-blow-out stem
Sealing	Single seated bi-directional, with preferential flow direction, to avoid pressure trapped between the seats. Metal seated with Tungsten or Chrome Carbide or Stellite coating; Soft seated with thermoplastic polymers (Nylon, Devlon, PEEK, PCTFE), special polymers upon request
Leakage rate	ISO 5208 rate A soft seated, rate B, C, D metal seated
Operating Description	The movement of the ball tilted from the seat before starting the rotation eliminates the wear of the seat seal and allows for smooth movement and low torque. The same tilting movement when starting the opening allows for a cleaning flow all around ball surface; this flow automatically flushes the ball surface removing eventual dirt particles from the sealing areas
Lifting points	Included for sizes ≥ DN150 (6”) or on valves of 250 kg min
Support feet	Included for sizes ≥ DN150 (6”) or on valves of 250 kg min
Stem extension	Available for applications in low/cryogenic temperature applications or for high temperature application
Valve operation locking device (optional)	Handwheel, Gear box or Actuator with position indicator and locking device
Material testing	Pressure containing & controlling parts to EN 10204 3.1 Materials in Sour Service according to NACE MR0175, MR0103, ISO 15156 Non-destructive testing (NDT) to API 6D, ASME B16.34
Valve testing	Hydrostatic & pneumatic testing to API 598 or API 6D, ASME B16.34, ISO 5208 (other upon request)

Technical Data

Design	API 6D, API 6A, ASME B16.34, ISO 14313, ISO 10423, ISO 17292
Design pressure	ASME B16.34, API 600
Wall thickness	Acc.to API 600, ASME VIII Div. I, ASME VIII Div. 2, ISO 17292, API 600
Face to Face	API 6D, ASME B16.10 Long pattern
Temperature range	-196° to 550°C (-320° to 1022°F)
Pressures range	PN20 (ANSI 150) to PN420 (ANSI 2500)
Size range	DN50 (2”) to DN600 (24”)
End connections	ASME B16.5 ≤ DN600 (24”) Flanged RF, FF, RTJ MSS-SP-44 = DN550 (22”) Flanged RF, FF, RTJ ASME B16.25 Butt-Weld BW Clamp (HUB)

Approvals

Safety Integrity Level	Upon request
Fire Safe	API 607, API 6FA, BS 6755, ISO 10497-5
Area Classification	ATEX 94/9/EC
Pressure Equipment Directive	PED 97/23/EC
Fugitive Emission	ISO 15848/1, ISO 15848/2

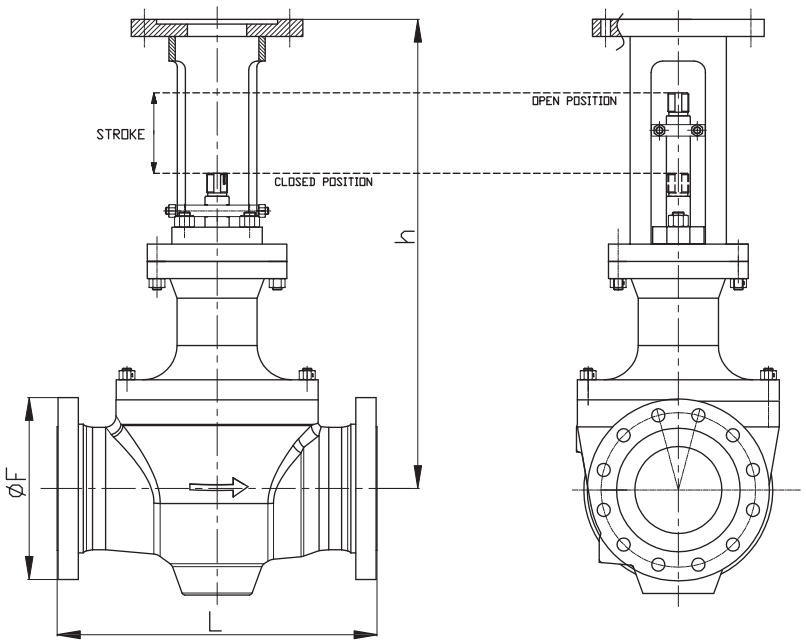

HIGH TEMPERATURE

CORROSIVE & DIRTY

LOW TEMPERATURE

HIGH PRESSURE





erreesse



erreesse
S p e c i a l s

Via delle Betulle 8A/8B/8C, 28075 Grignasco (NO) - ITALY
Main phone +39 0163 415901 - Fax +39 0163 415941
ITALY - P.IVA/VAT no. 02168380026

e-mail: **sales@erreesse-valves.com**
website: **www.erreesse-valves.com**