erreesse
VALVES

ULTRA-SHORT DBB

Side Entry Split Body

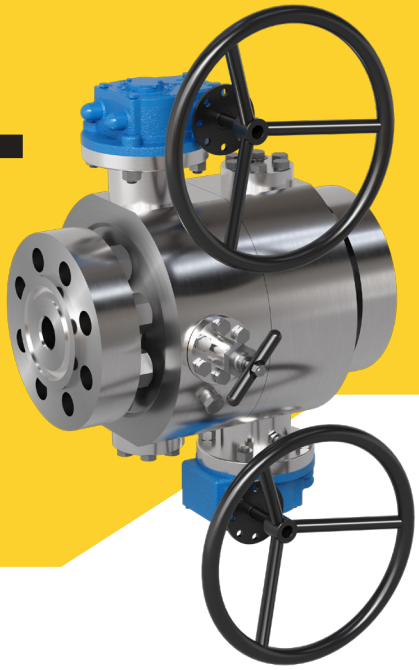

MAIN FEATURES

DESIGN	Two balls /Two pieces body with centered separation - one bolted connection obtained through flushed socket head cap screws
APPLICATION	High pressure, Cryogenic, High temperature
PORT	Reduce bore, full bore or fully piggable
END CONNECTION	ASME B16.5 Flanged configuration for facilitating the intallation with respect to studded arrangement
PRESSURE RANGE	ASME 150 to ASME 4500 (API6D) API 2000 to API 15000 (API6A)
SIZE RANGE	ASME 150 to ASME 4500 (API6D) API 2000 to API 15000 (API6A)
TEMPERATURE RANGE	-196° to 340° (-320° to 644° F)
OPERATOR	Same side (Cryogenic application) or opposite

ULTRA-SHORT DESIGN VS STANDARD DESIGN

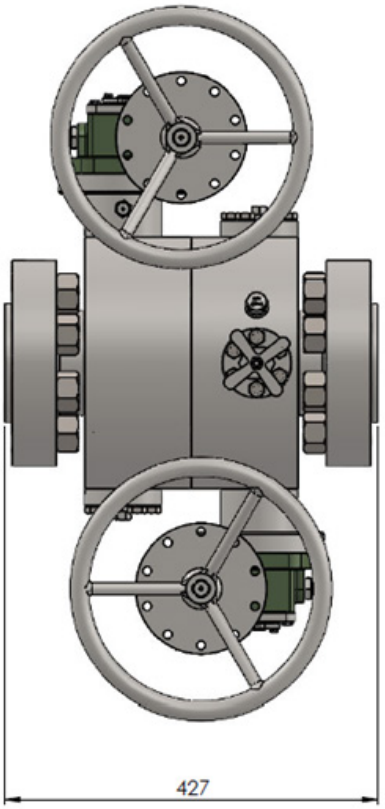

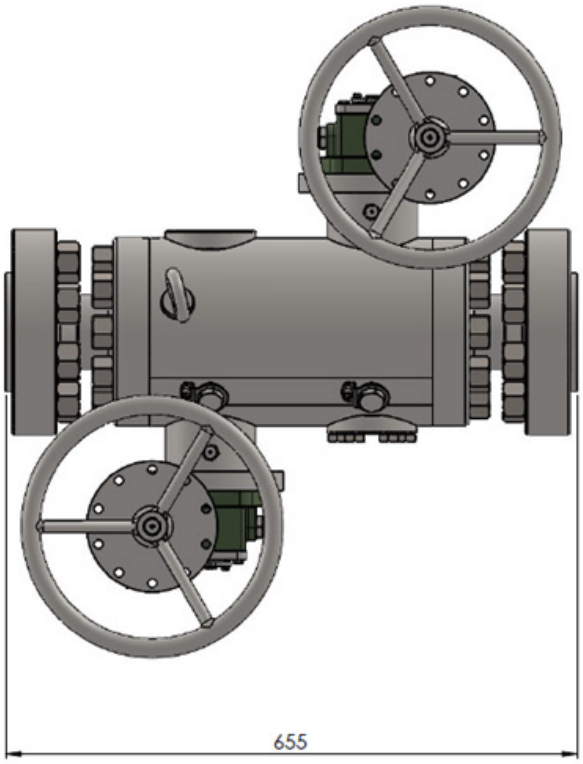

ASME B16.10 / API 6D end-to-end for single 2" 2500# valve : 454 mm

FACE TO FACE COMPARISON TO STANDARD DESIGN

	CLASS 600#		CLASS 900#		CLASS 1500#	
SIZE	ULTRA SHORT	STANDARD	ULTRA SHORT	STANDARD	ULTRA SHORT	STANDARD
1/2''	280	340	290	350	290	350
3/4''	280	340	295	355	295	355
1''	310	370	330	420	330	420
1.1/2''	350	400	390	470	390	470
2''	390	470	410	555	420	555